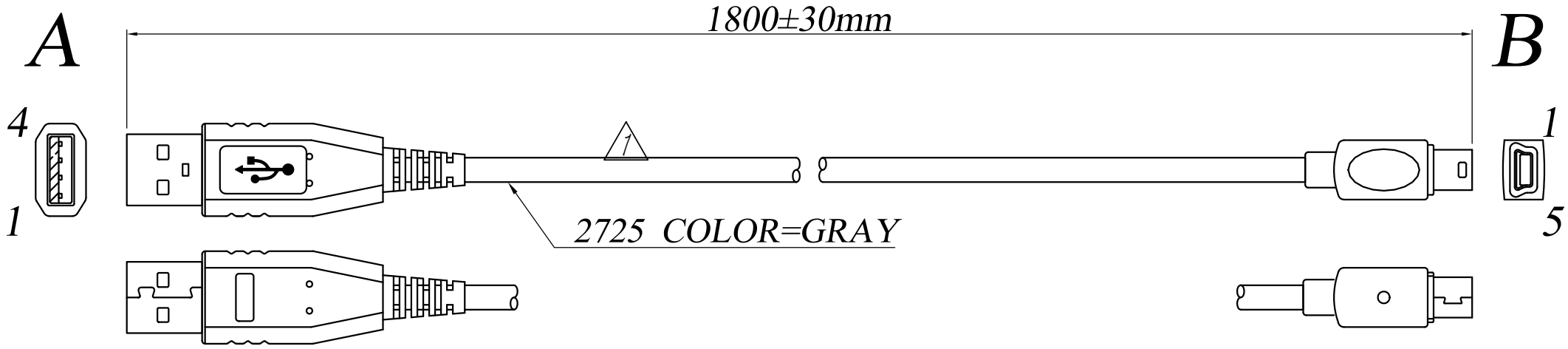

	A	B
RED	1	1
WHITE	2	2
GREEN	3	3
BLACK	4	5
	SHELL	SHELL

RoHS
2002/95/EC
YIMTEK

NO	DESCRIPTION	DRAWING	EDIT DATA	REV
3				
2				
1	客人變更線材不需增加鐵粉鋅(The ferrite core is unnecessary)	Tino	2011/02/09	A/1
		Tino	2010/12/17	A/0

PROJECTION	TOLERANCE UNLESS OTHERWISE SPECIFIED	
UNITS MM	XX ±0.5 .X ±0.25 .XX ±0.10 .XXX ±0.05	
核准者 APPROVAL	審圖者 CHECKED	繪圖者 DRAWING
	SAM	Tino

YIMTEK ELECTRONIC CO., LTD.

DATE.	09/02/2011
REVISE.	A/1
TITLE.	CABLE
PART NO.	RC-C070USBAMI00001R
DWG NO.	YM-EXT-C0070001